Samsung

ARTIK™ Modules 7

710 Development Board User Guide

TABLE OF CONTENTS

List of Figures

List of Tables

VERSION HISTORY

Revision	Date	Description	Maturity
1.0	October 17, 2016	ARTIK 710 Development Board User Guide	Release

HANDLING GUIDE

Precaution against Electrostatic Discharge

When using the Samsung ARTIK™ 710 Module, ensure that the environment is protected against static electricity:

Contamination

Do not use the ARTIK 710 Module in an environment exposed to dust or dirt adhesion.

Temperature/Humidity

The ARTIK 710 Module is sensitive to:

1. Environment
2. Temperature
3. Humidity

High temperature or humidity deteriorates the characteristics of ARTIK 710 Module, therefore, do not store or use the ARTIK 710 Module under such conditions.

Mechanical Shock

Do not to apply excessive mechanical shock or force on the ARTIK 710 Module.

Chemical

Do not expose the ARTIK 710 Module to chemicals. Exposure to chemicals leads to reactions that deteriorate the characteristics of the ARTIK 710 Module.

EMS (Electro Magnetic Susceptibility)

Strong electromagnetic waves or magnetic fields may affect the characteristics of the ARTIK 710 Module during the operation under insufficient PCB circuit design for Electro Magnetic Susceptibility (EMS).

ARTIK 710 Development Environment Overview

FEATURES

The ARTIK 710 Development Environment consists of 1x Interposer Board , 1x Platform Board, and 1x IF Board. The Interposer Board does include the ARTIK 710 Module. The ARTIK 710 Development Environment is an affordable approach for developing an IoT solution. *Figure 1* shows the locations of the various boards that make up the ARTIK 710 Development Environment.

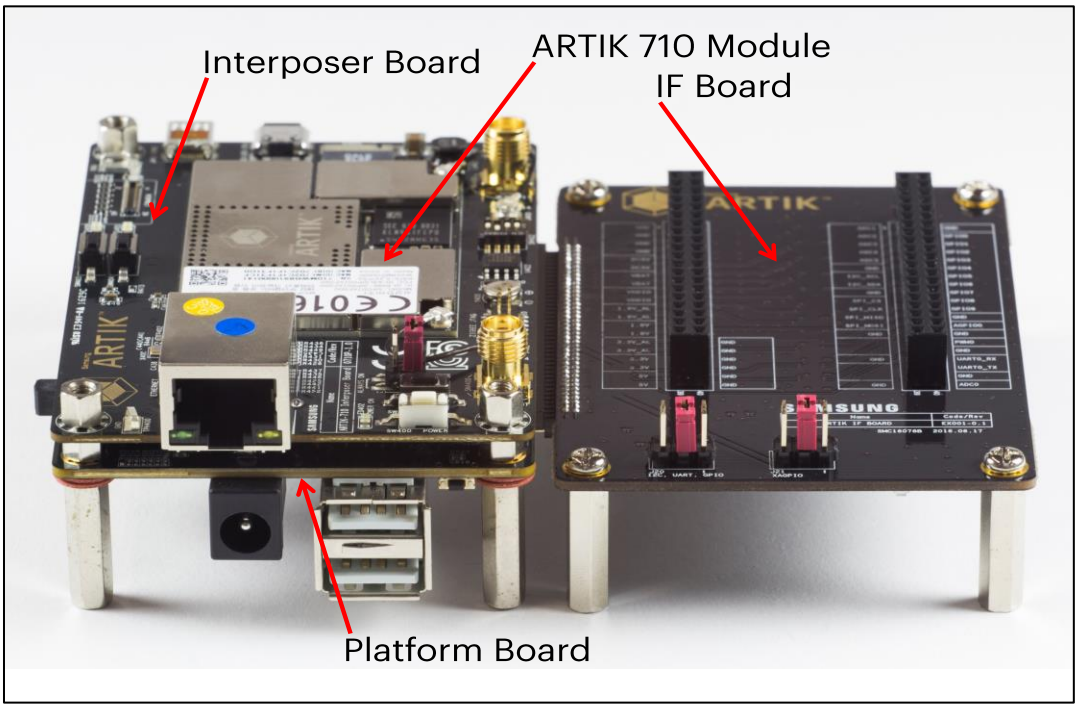

Figure 1. Preview of the ARTIK 710 Board

Block diagram

Figure 2 shows the block diagram of the ARTIK 710 Development Environment, if you want more information on the ARTIK 710 Module please consult the ARTIK 710 Module Datasheet.

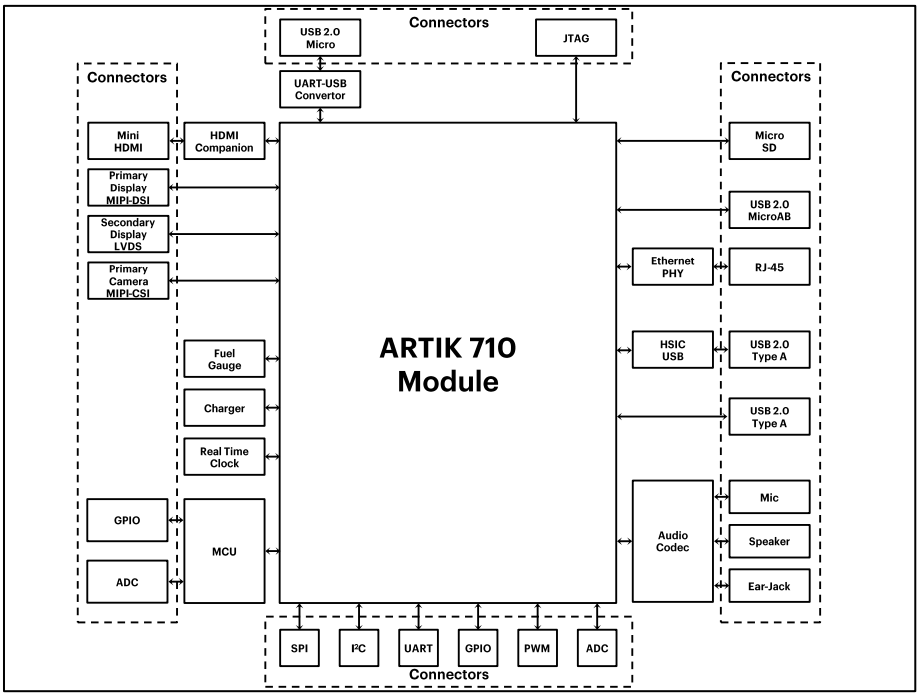

Figure 2. ARTIK 710 Development Environment

Mechanical Drawings

Figure 3 and *Figure 4* show the ARTIK 710 Development Environment Interposer Board and the Platform Board respectively.

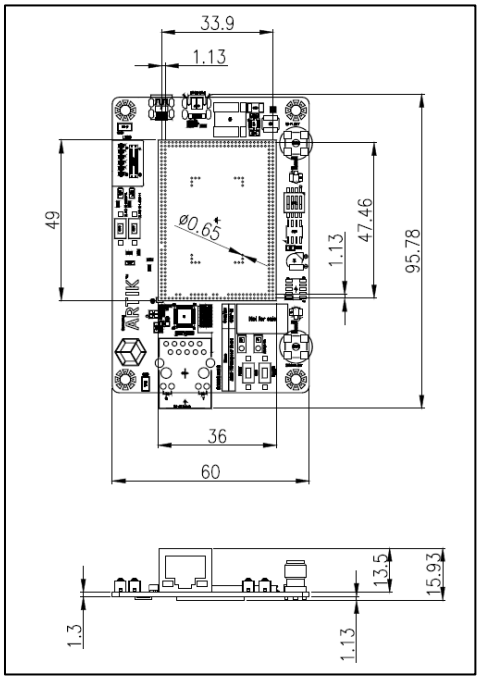

Figure 3. Mechanical Drawing ARTIK 710 Interposer Board all dimensions are in [mm]

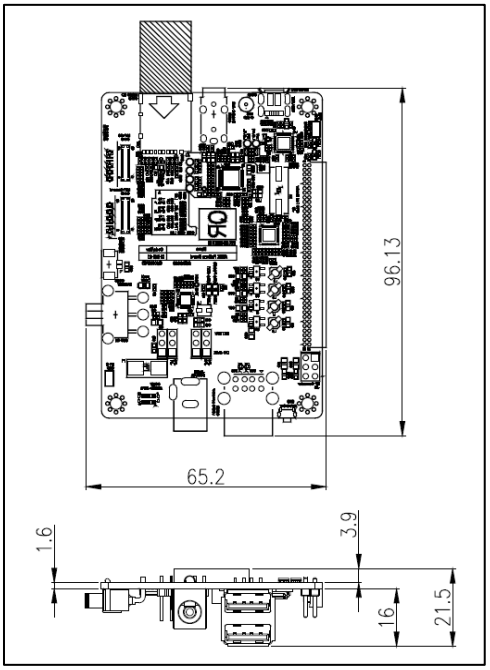

Figure 4. Mechanical Drawing ARTIK 710 Platform Board all dimensions are in [mm]

ARTIK 710 Module

The ARTIK 710 Development Environment contains the ARTIK 710 Module. This section will describe some of the main features of this module. For more information on the ARTIK 710 Module please consult the ARTIK 710 Module datasheet.

ARTIK 710 Module Specification

The ARTIK 710 Module is designed for IoT devices and it contains a lot of functions based on a Linux® system. Not only multimedia functions but also network functions for example Wi-Fi or ZigBee®. In addition the ARTIK 710 Module has mass storage functionality and its own security solution. Table 1 shows the main features of the ARTIK 710 Module that is part of the ARTIK 710 Development Environment.

Table 1. Main Features of the ARTIK 710 Module

Processor	
CPU	8x ARM® Cortex®-A53@1.4GHz
GPU	3D graphics accelerator
Media	
Camera I/F	4-Lane MIPI CSI
Display	4-Lane MIPI DSI up to FHD@24bpp
Audio	I^2S audio interface
Memory	
DRAM	1GB DDR3 @ 800MHz
FLASH	4GB eMMC
Security	
Secure Element	Secure point to point authentication and data transfer
Trusted Execution Environment	Trustware
Radio	
WLAN	IEEE 802.11a/b/g/n/ac
Bluetooth®	4.1(Classic + BLE)
802.15.4	ZigBee or Thread
Power Management	
PMIC	Provides all power of the ARTIK 710 Module using on board bucks and LDOs
Interfaces	
Analog and Digital I/O	GPIO, I^2C, SPI, UART, SDIO, USB 2.0, JTAG, Analog Input

ARTIK 710 Development Environment Interposer Board

The Interposer Board as depicted in *Figure 5* highlights the most important components on the Interposer board.

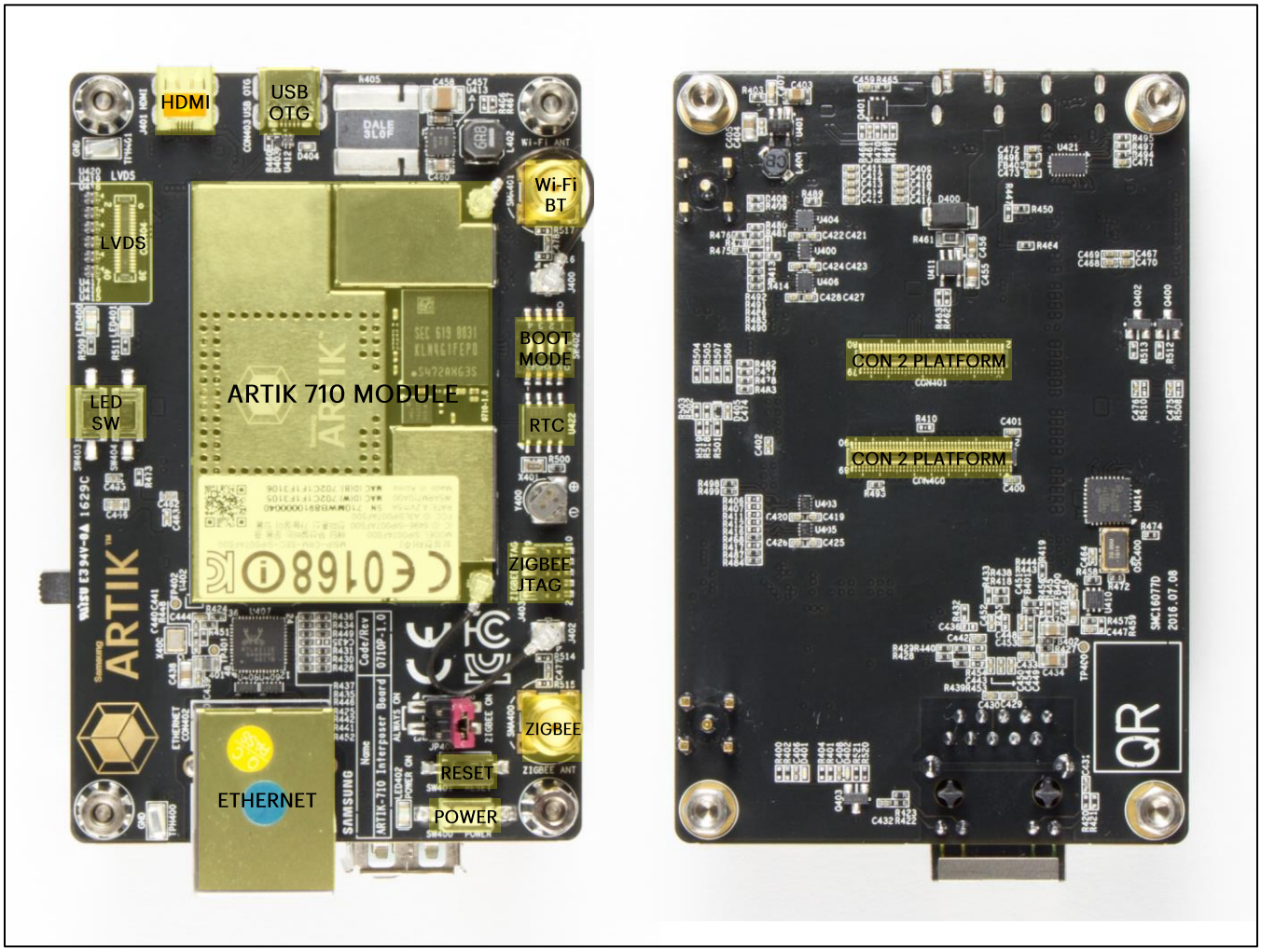

Figure 5. ARTIK 710 Development Environment Interposer Board Left Top Side, Right Bottom Side

Interposer Board Boot mode Configuration

This section describes the various boot modes that are supported on the ARTIK 710 Development Environment. *Table 2* and *Figure 6* show how to manipulate SW4 and where SW4 is located on the Interposer Board to set the various booting options that are available on the ARTIK 710 Development Environment.

Table 2. Boot options that can be set on the Interposer Board

SW4	Comment	eMMc 1st Boot	SD Card 1st Boot	USB 1st Boot
1	–	Off	Off	On
2	–	Off	Off	On
3	Hardware Board Revision ≤ 0.5	On	On	X
3	Hardware Board Revision ≥ 1.0	Off	Off	X
4	–	Off	On	X

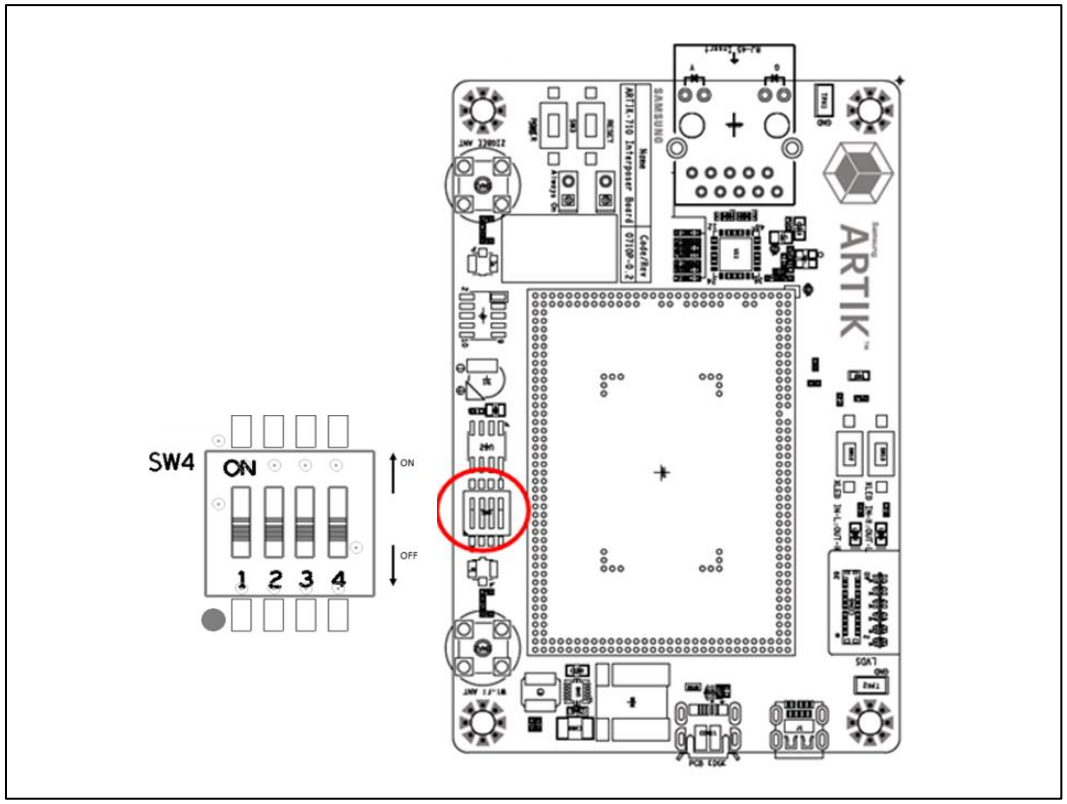

Figure 6. ARTIK 710 Development Environment Booting Switch Location

USB OTG

The Interposer board has 1x USB OTG connector located as can be seen in *Figure 7*.

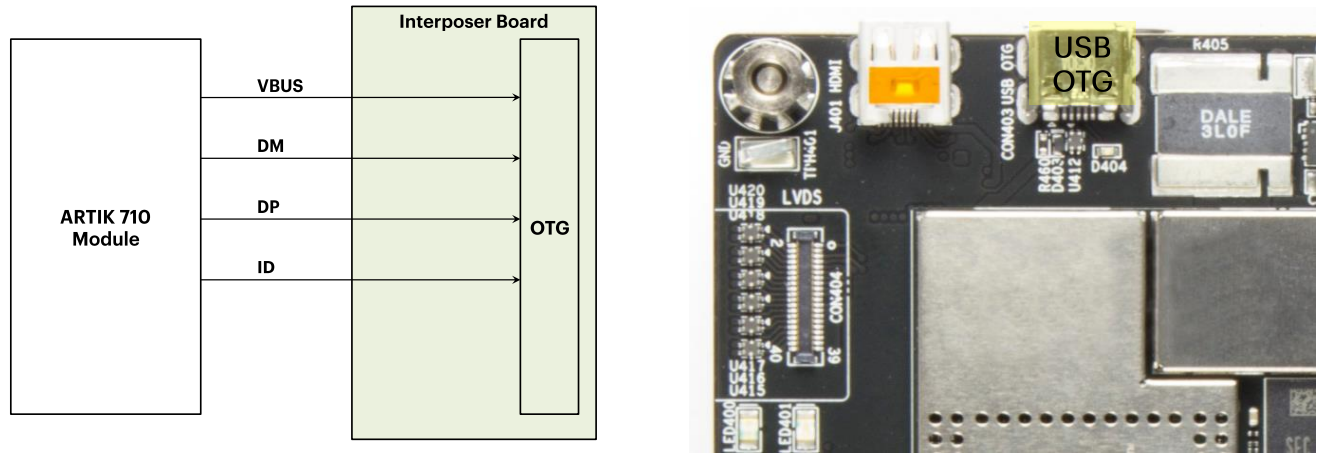

Figure 7. USB OTG Interface location on the Interposer Board

HDMI 1.4A

The Interposer board has 1x HDMI 1.4a connector (Micro D-Type) located as can be seen in *Figure 8*. The following video formats are supported:

1. 480p/480i @59.94Hz/60Hz, 576p/576i@50Hz
2. 720p/720i @50Hz/59.94Hz/60Hz
3. 1080p/1080i @50Hz/59.94Hz/60Hz

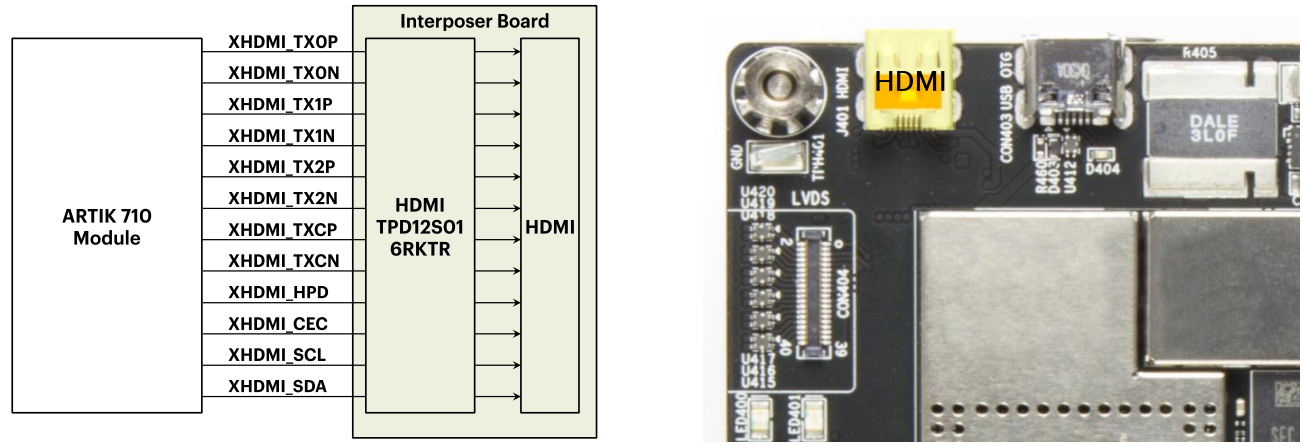

Figure 8. HDMI 1.4a Interface location on the Interposer Board

LVDS

The Interposer board has 1x LVDS Interface containing 5x data channels and 1x clock channel, its location can be seen in *Figure 9*. The available maximum resolution is 1920x1080@60fps.

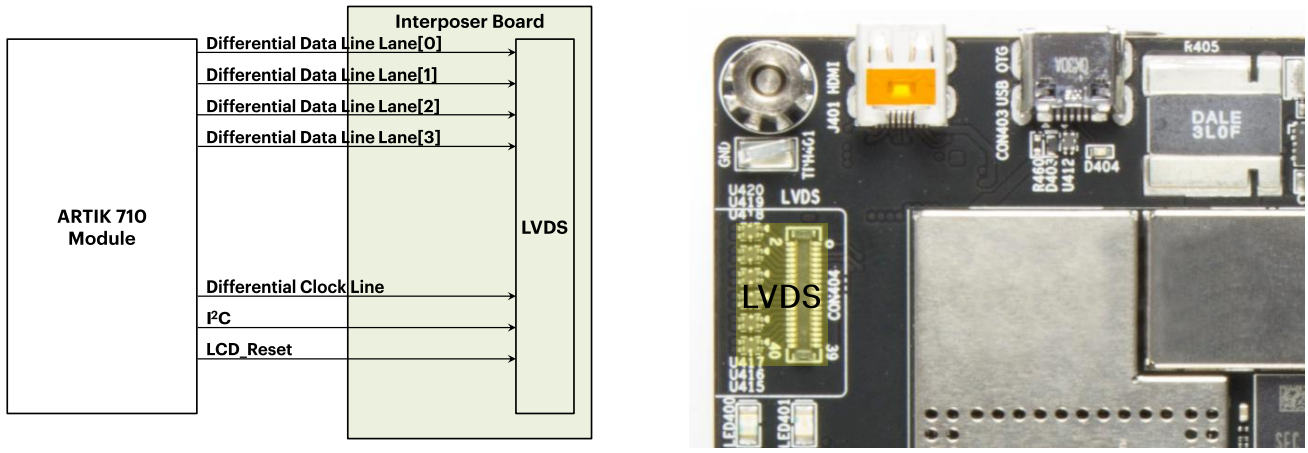

Figure 9. LVDS Interface location on the Interposer Board

Ethernet

The Interposer board has 1x Ethernet Interface, its location can be seen in *Figure 10*. The Ethernet Interface is based on 802.3az-2010 complying to the Energy Efficient Ethernet (EEE) standard. The maximum theoretical speed of the interface is 1000Mbps.

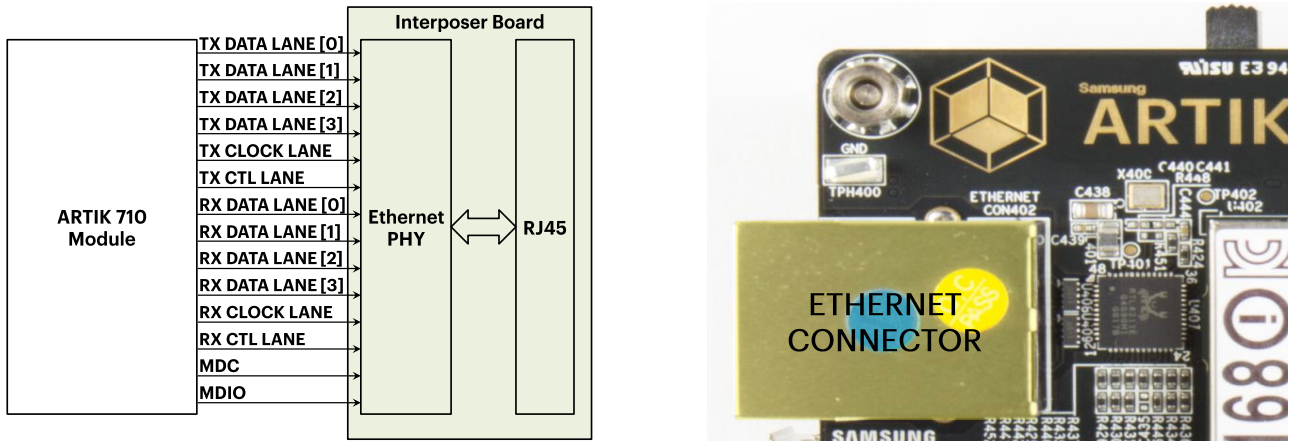

Figure 10. Ethernet Interface location on the Interposer Board

Antenna

When using Wi-Fi/Bluetooth (same antenna) or ZigBee the included antenna's need to be attached to the Interposer Board, see also *Figure 11*. The most important antenna properties are conveyed in *Table 3*.

Table 3. Antenna Specification

Antenna Property	Dipole Antenna
Antenna peak gain	+1.43dB (2.4GHz)/+0.91dB (5GHz)
Frequency	2.4GHz, 5GHz (for Wi-Fi, BT, ZigBee)
Connector type	SMA-M
Antenna size	108.7mm

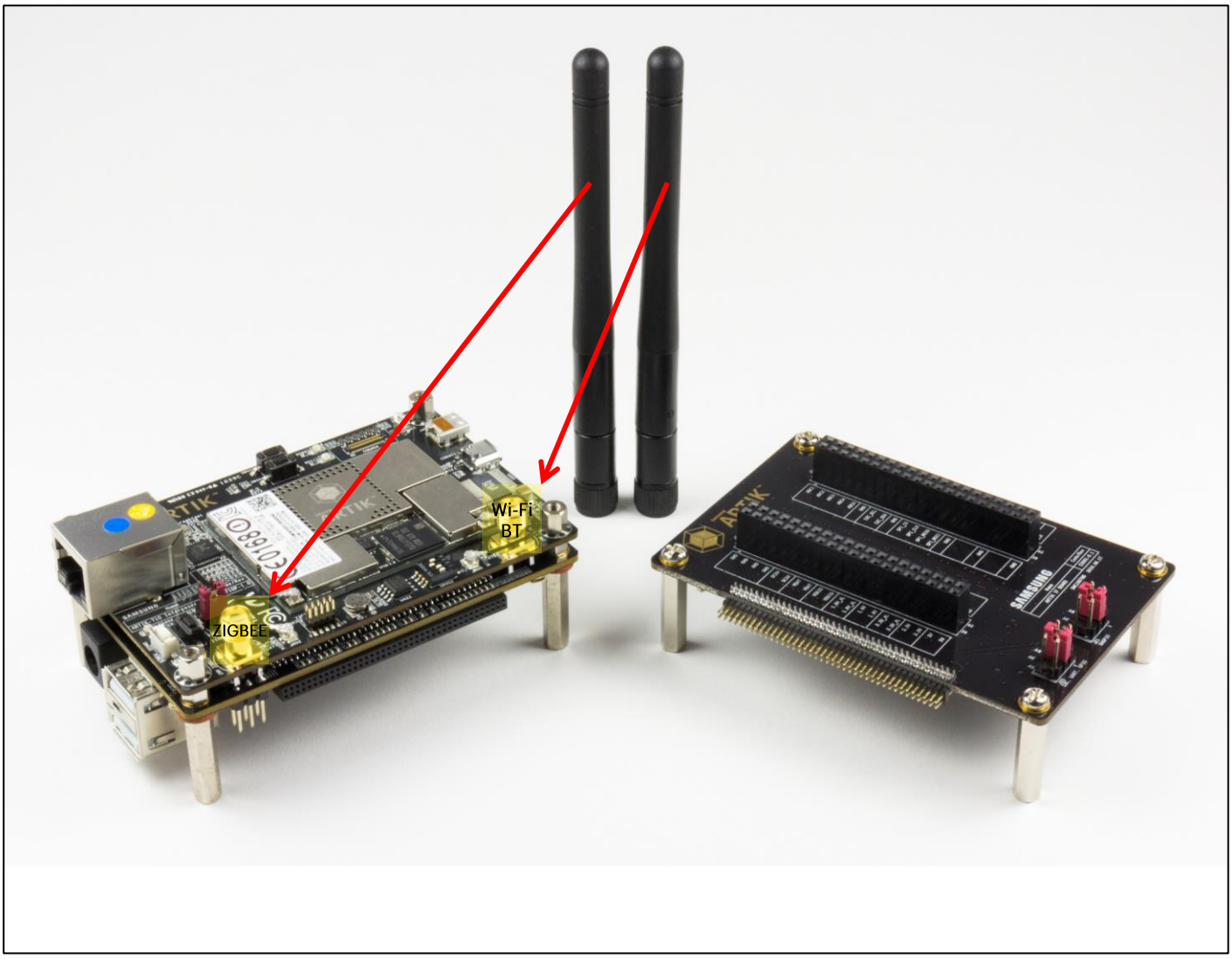

Figure 11. Antenna Placement

ARTIK 710 Development Environment Platform Board

The Platform Board as depicted in *Figure 12* highlights the most important components on the platform board.

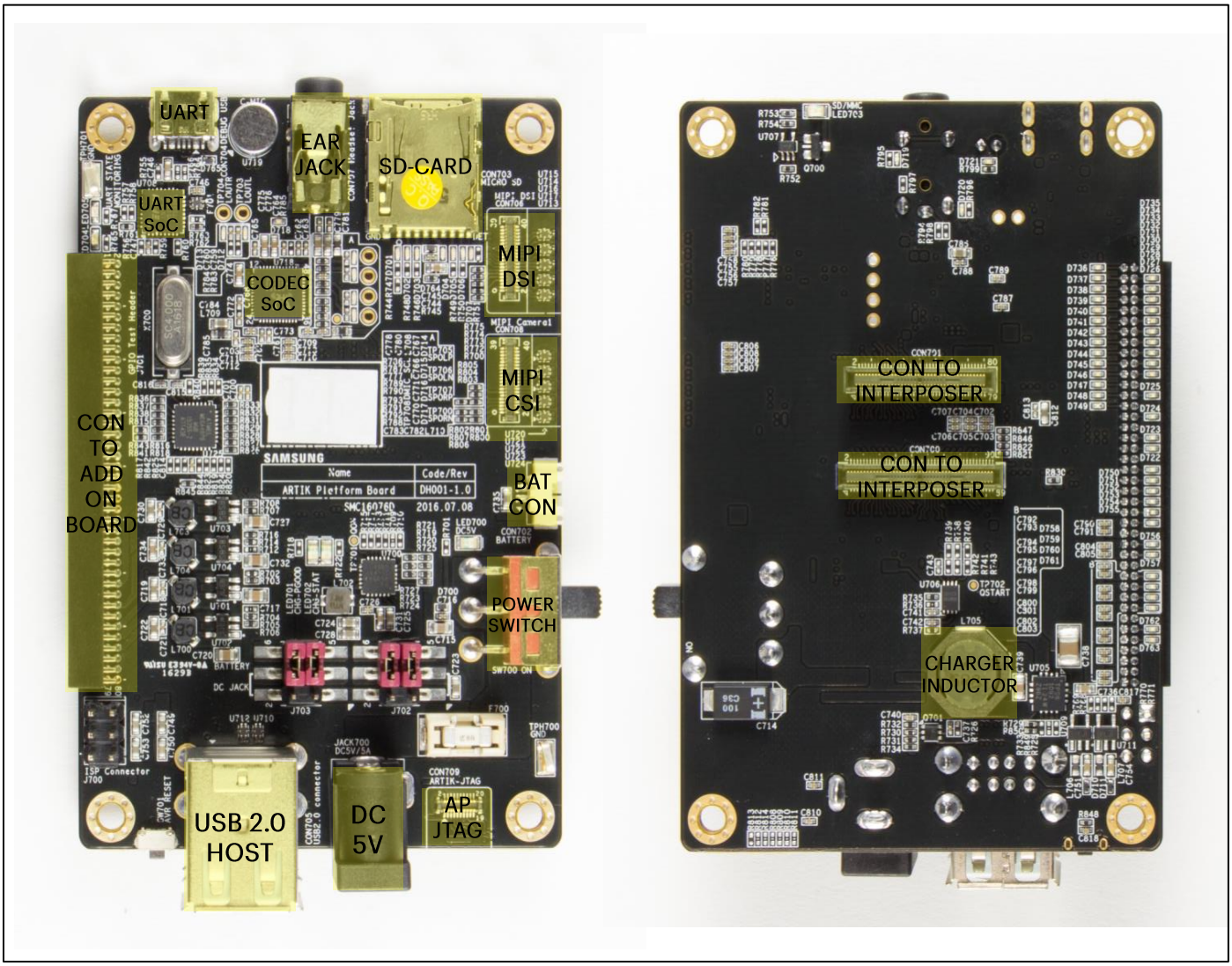

Figure 12. ARTIK 710 Module Platform Board Left Bottom Side, Right Top Side

Configuration of External Power Source

Through selection of the Jumpers JP1-JP4 the IO power source can be selected to either DC-5V Adapter (All Jumpers in the 1-2 position), or to Battery which is the default setting (All Jumpers in the 2-3 position). *Figure 13* shows the default Battery setting and how to switch to DC-5V Adapter. When the ARTIK 710 Development Board is used with an external power adapter make certain that you use a 5V-5A adapter with a 2.1x5.5mm plug.

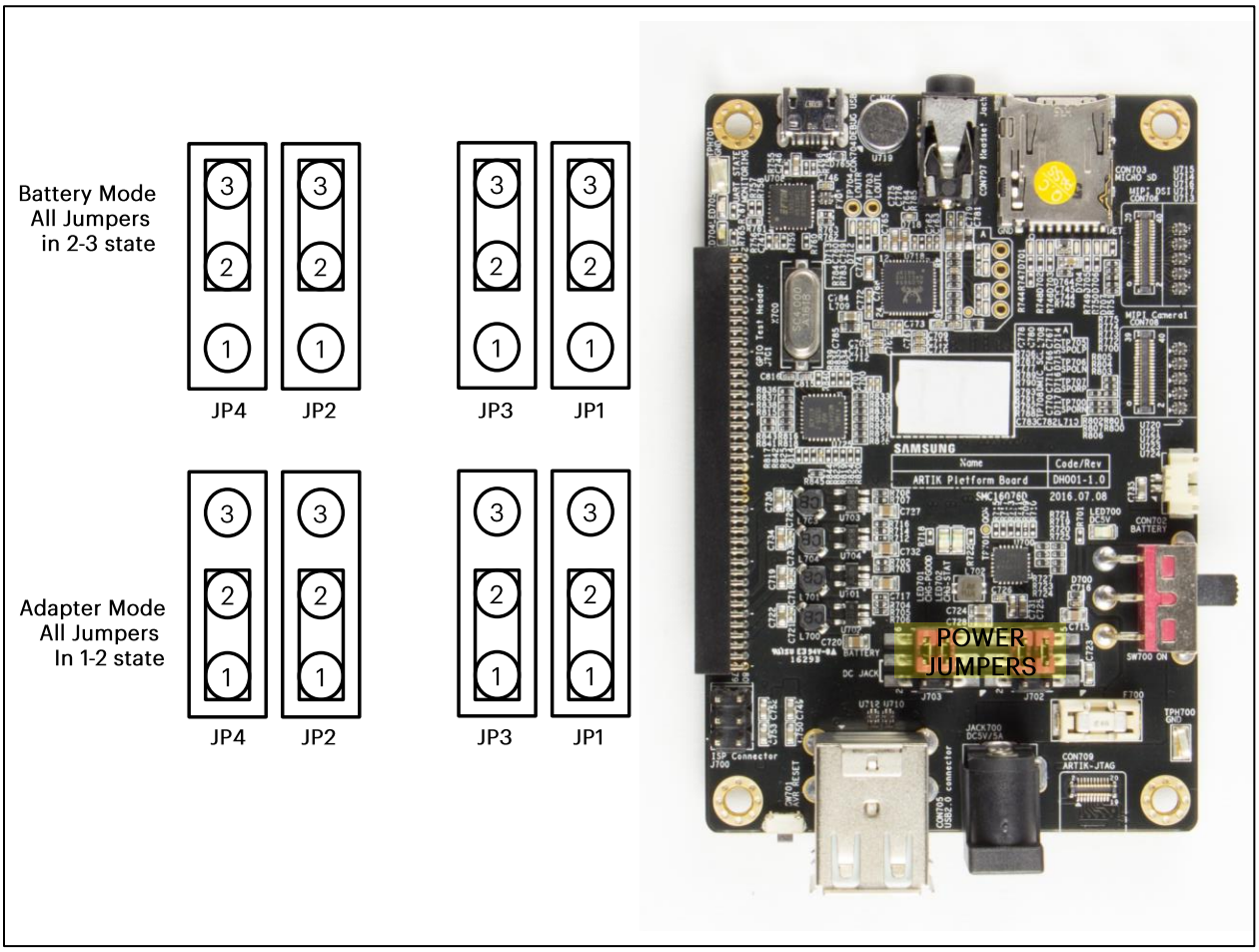

Figure 13. Jumper Interface locations JP1-JP4 on the Platform Board

SD-CARD INTERFACE

The Platform board has 1x SD-CARD interface supporting SD3.0 located as can be seen in *Figure 14*.

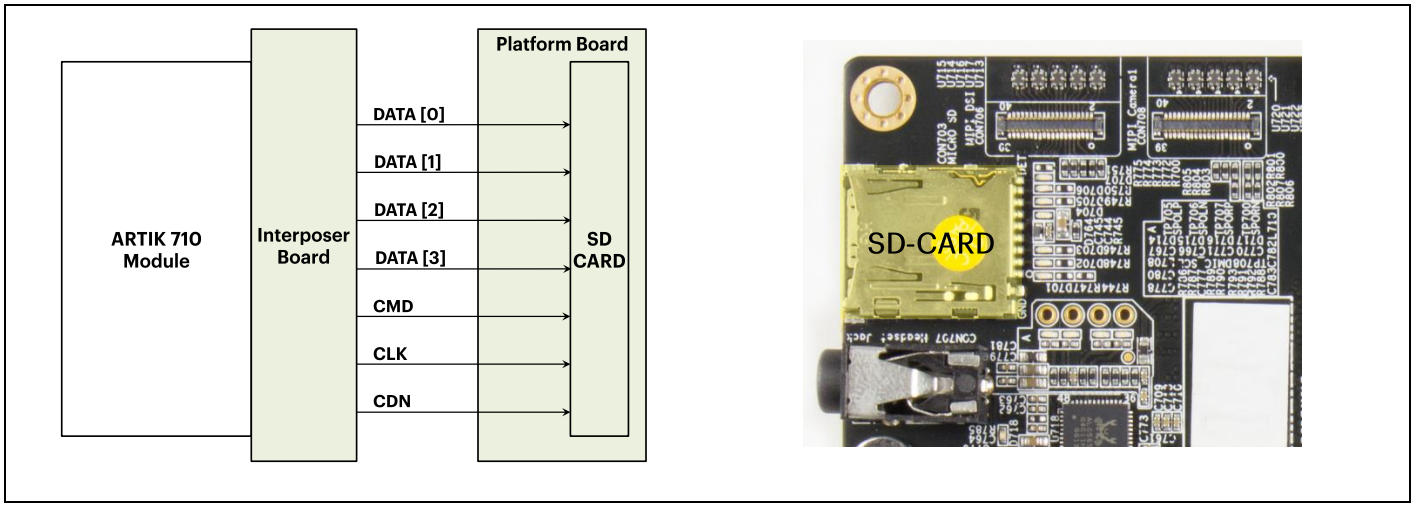

Figure 14. SD-Card Interface location on the Platform Board

EARJACK INTERFACE

The Platform board has 1x 4 pin ear jack interface supporting stereo audio as can be seen in *Figure 15*.

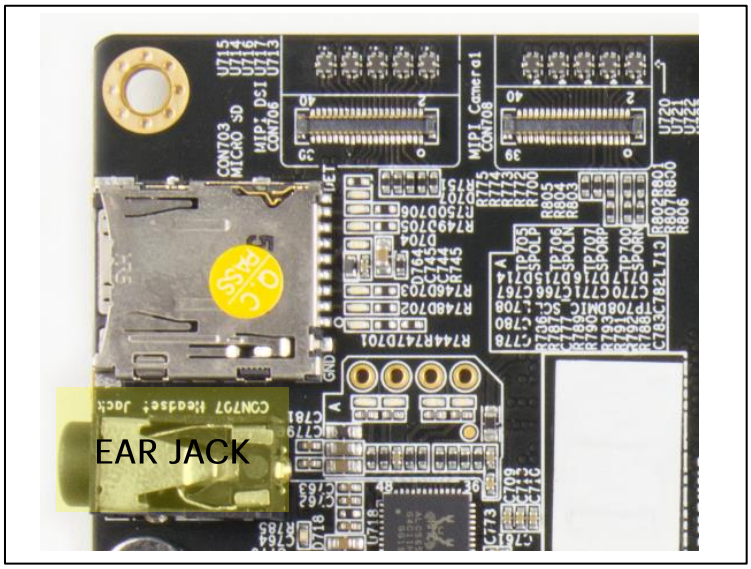

Figure 15. Ear Jack Interface location on the Platform Board

MIPI DSI/CSI INTERFACE

The Platform board has 1x MIPI DSI and 1x MIPI CSI interface. The location of the DSI Display interface can be seen in *Figure 16*. The location of the MIPI CSI interface can be seen in *Figure 17*.The MIPI DSI interface can operate at a maximum resolution of WUXGA (1920x1200), whereas the MIPI CSI interface can have a static resolution of 5M pixels or a dynamic resolution for video capturing of 1080P.

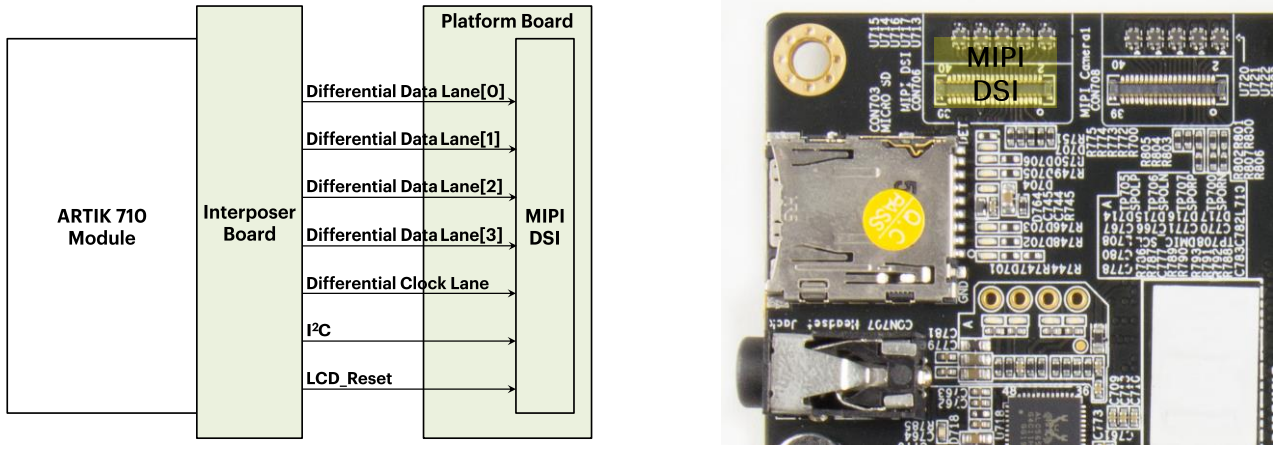

Figure 16. MIPI DSI Interface location on the Platform Board

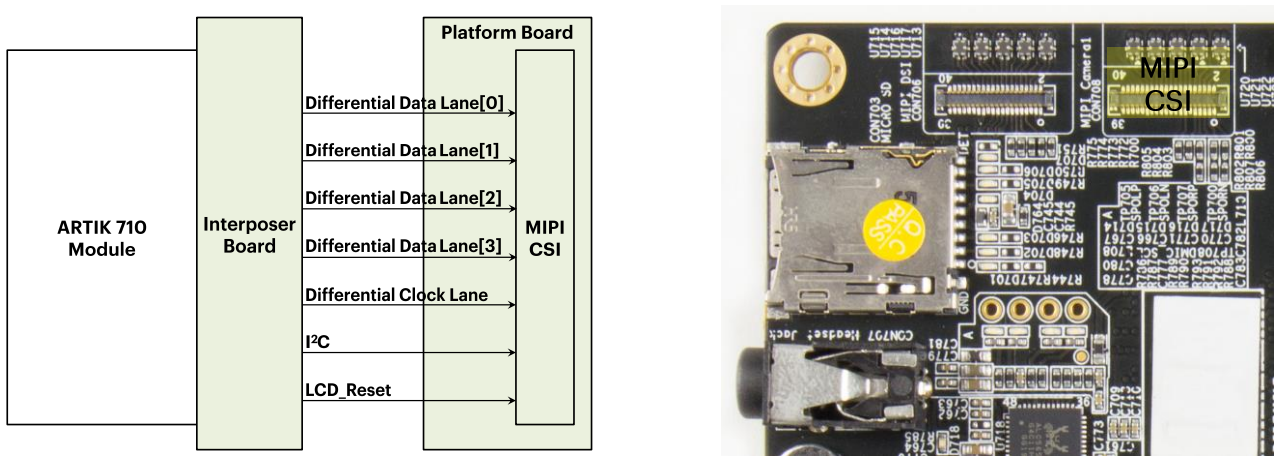

Figure 17. MIPI CSI Interface Location on the Platform Board

USB Host 2.0 Interface

The Platform board carries 2x USB 2.0 Interfaces. The location of the USB 2.0 interfaces can be seen in *Figure 18*.

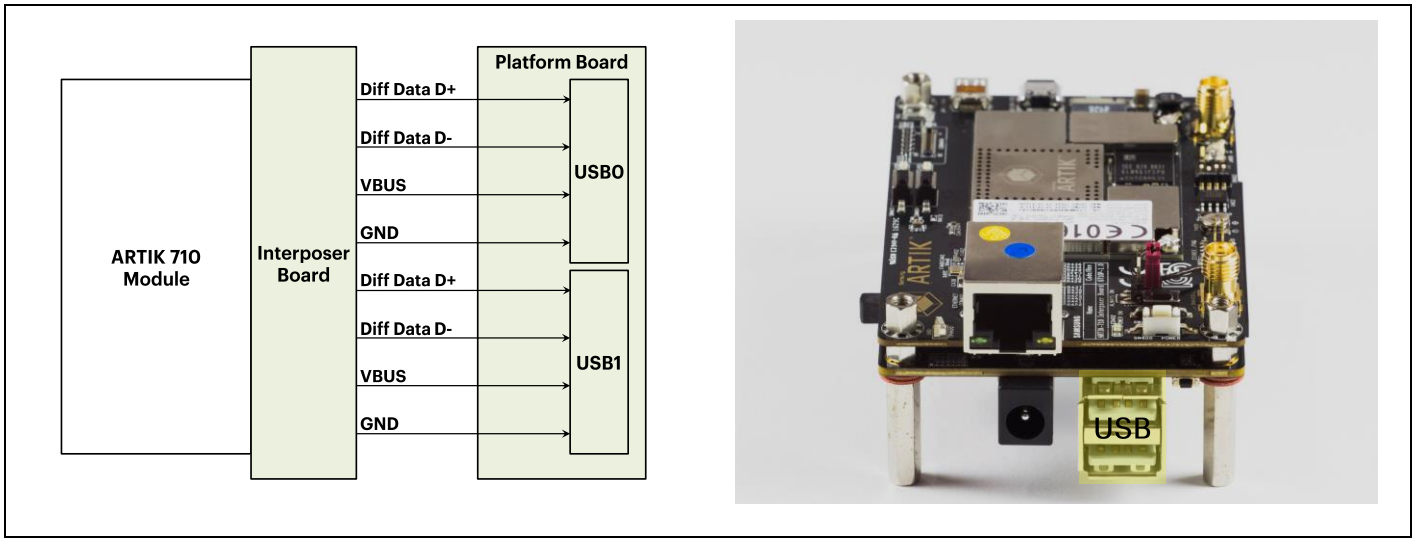

Figure 18 USB2.0 Interface location on the Platform Board

Connector to IF Board Interface

The Platform board has 1x expansion connector that can be seen in *Figure 19*. This connector enables for expansion possibilities.

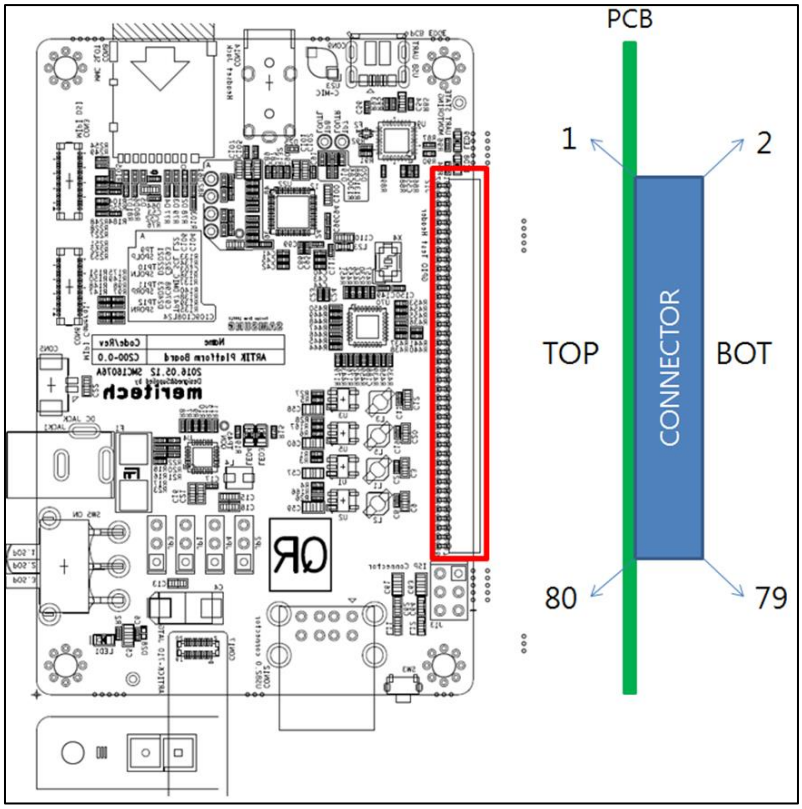

Figure 19. Expansion Connector Interface location on the Platform Board

ARTIK 710 Development Environment IF Board

Preview on the ARTIK IF board

Figure 20 shows the highlights of the connector IF board. In addition *Table 4* with J2 and *Table 5* with J3 show the pinout of the connectors with its meaning.

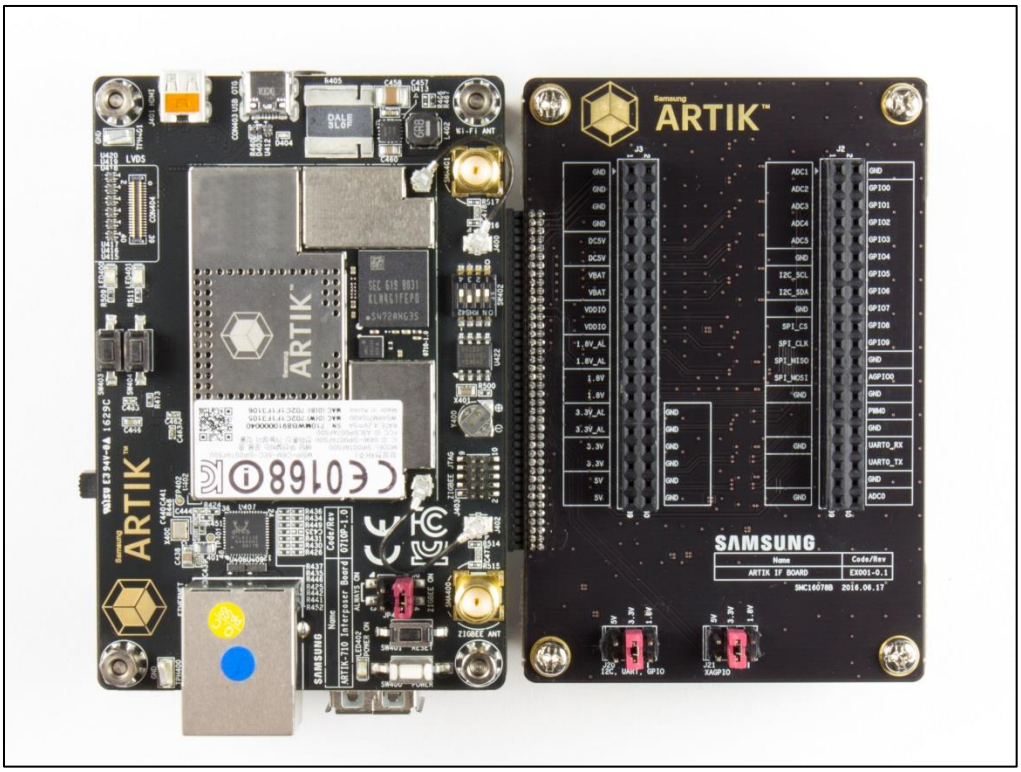

Figure 20. ARTIK 710 IF Board

Table 4. Connector J2

Pin Name	Pin Number	Pin Number	Pin Name
XADC1	1	2	GND
XADC2	3	4	ADD_XGPIO0
XADC3	5	6	ADD_XGPIO1
XADC4	7	8	ADD_XGPIO2
XADC5	9	10	ADD_XGPIO3
GND	11	12	ADD_XGPIO4
ADD_XI2C0_SCL	13	14	ADD_XGPIO5
ADD_XI2C0_SDA	15	16	ADD_XGPIO6
GND	17	18	ADD_XGPIO7
ADD_XSPI0_CS	19	20	ADD_XGPIO8
ADD_XSPI0_CLK	21	22	ADD_XGPIO9
ADD_XSPI0_MISO	23	24	GND
ADD_XSPI0_MOSI	25	26	ADD_XAGPIO0
GND	27	28	GND
NC	29	30	ADD_XPWM0_OUT
MICOM_GPIO1	31	32	GND
GND	33	34	ADD_XUART0_RX
NC	35	36	ADD_XUART0_TX

Pin Name	Pin Number	Pin Number	Pin Name
NC	37	38	GND
GND	39	40	XADC0

Table 5. Connector J3

Pin Name	Pin Number	Pin Number	Pin Name
GND	1	2	MICOM_GPIO1
GND	3	4	MICOM_GPIO2
GND	5	6	MICOM_GPIO3
GND	7	8	MICOM_GPIO4
DC5V	9	10	MICOM_GPIO5
	11	12	MICOM_GPIO6
VBAT_MAIN	13	14	MICOM_GPIO7
	15	16	MICOM_GPIO8
AP_VDDIO	17	18	MICOM_GPIO9
	19	20	MICOM_GPIO10
VDD_EXT1P8_ALIVE	21	22	MICOM_GPIO11
	23	24	MICOM_GPIO12
VDD_EXT1P8	25	26	MICOM_GPIO13
	27	28	MICOM_GPIO14
VDD_EXT3P3_ALIVE	29	30	GND
	31	32	GND
VDD_EXT3P3	33	34	GND
	35	36	GND
VDD_EXT5P0_1	37	38	GND
	39	40	GND

Configuration of External Power Source

Through selection of the Jumpers J20 and J21 you can choose the IO power source (I^2C, UART, GPIO) or the XAGPIO power source of either, 1.8V, 3.3V or 5V. *Figure 21* shows how to set the various jumpers to switch between power sources.

Description	Power Source	Default Value	Connect
I2C, UART, GPIO	DCDC_5V_1	–	Place Jumper J20:[1-2]
	VDDEXT_33_OFF	☑	Place Jumper J20:[3-4]
	VDDEXT_18_OFF	–	Place Jumper J20:[5-6]
XAGPIO	DC5V	–	Place Jumper J21:[1-2]
	VDD_EXT3P3_ALIVE	☑	Place Jumper J21:[3-4]
	VDD_EXT1P8_ALIVE	–	Place Jumper J21:[5-6]

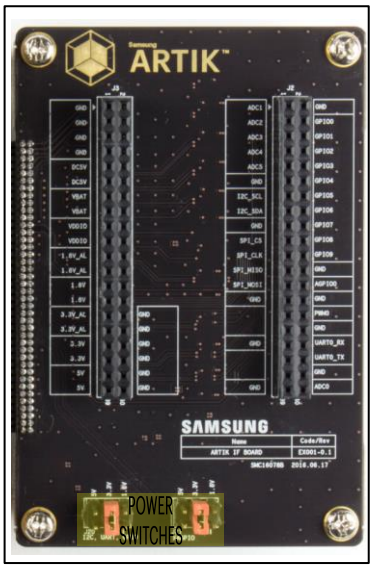

Figure 21. Jumper Interface locations J20, J21 on the IF Board

ARTIK 710 Development Environment Startup

This section will describe how to start working with your ARTIK 710 Development Environment by setting up a serial connection on your development PC and booting up the ARTIK 710 Development Environment.

Serial Port Connection

As a first step we will select a serial console to communicate with the ARTIK 710 Module that is located on the ARTIK 710 Development Environment. You can use a typical Linux serial console as depicted in *Figure 22*, using the serial connector. If your PC does not have a serial port, use the USB serial cable instead. To use the serial USB cable you need to install the associated device driver. *Figure 23* depicts the USB serial cable and where it is hooked up to the Platform Board.

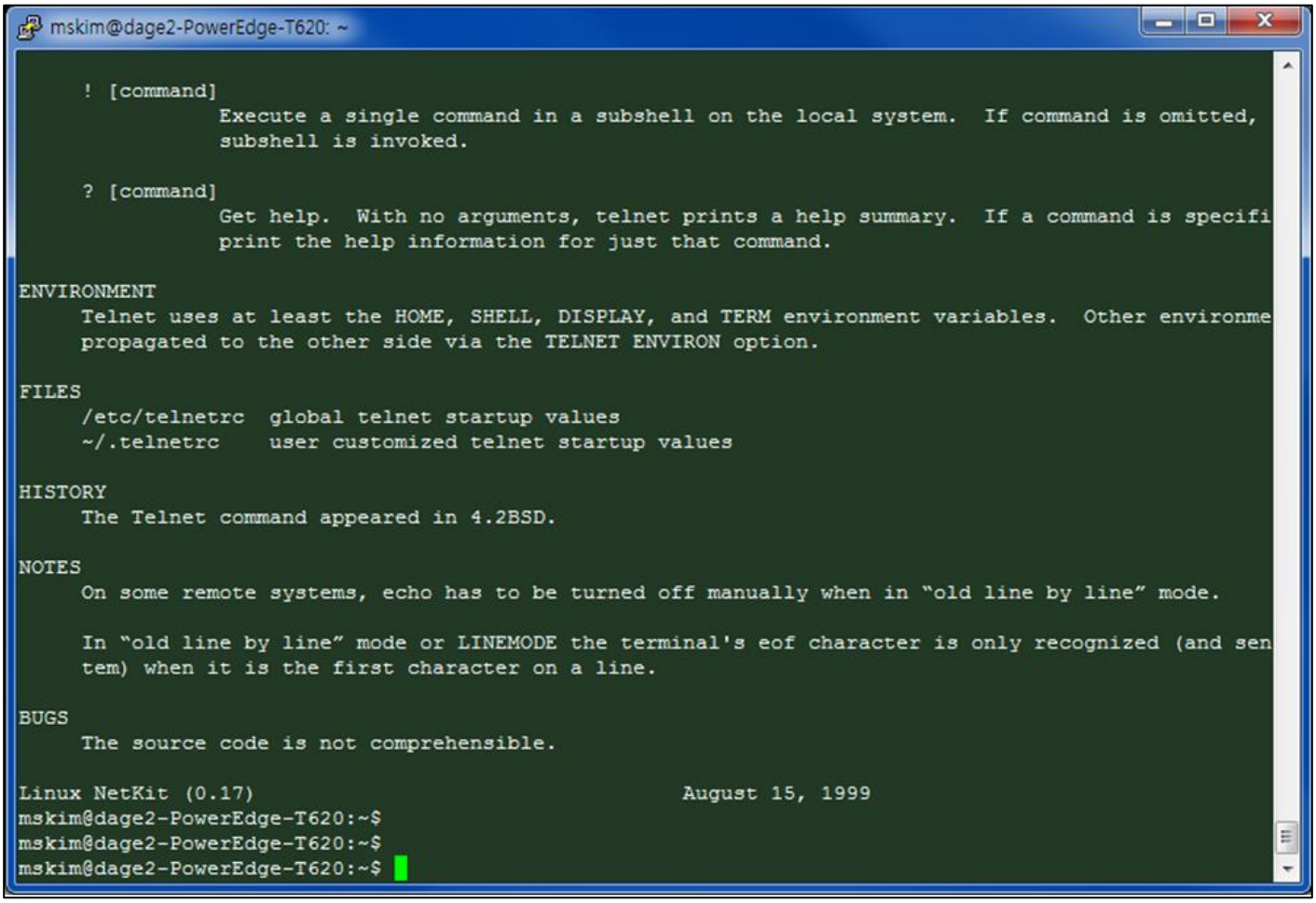

Figure 22. Typical Linux Serial Console

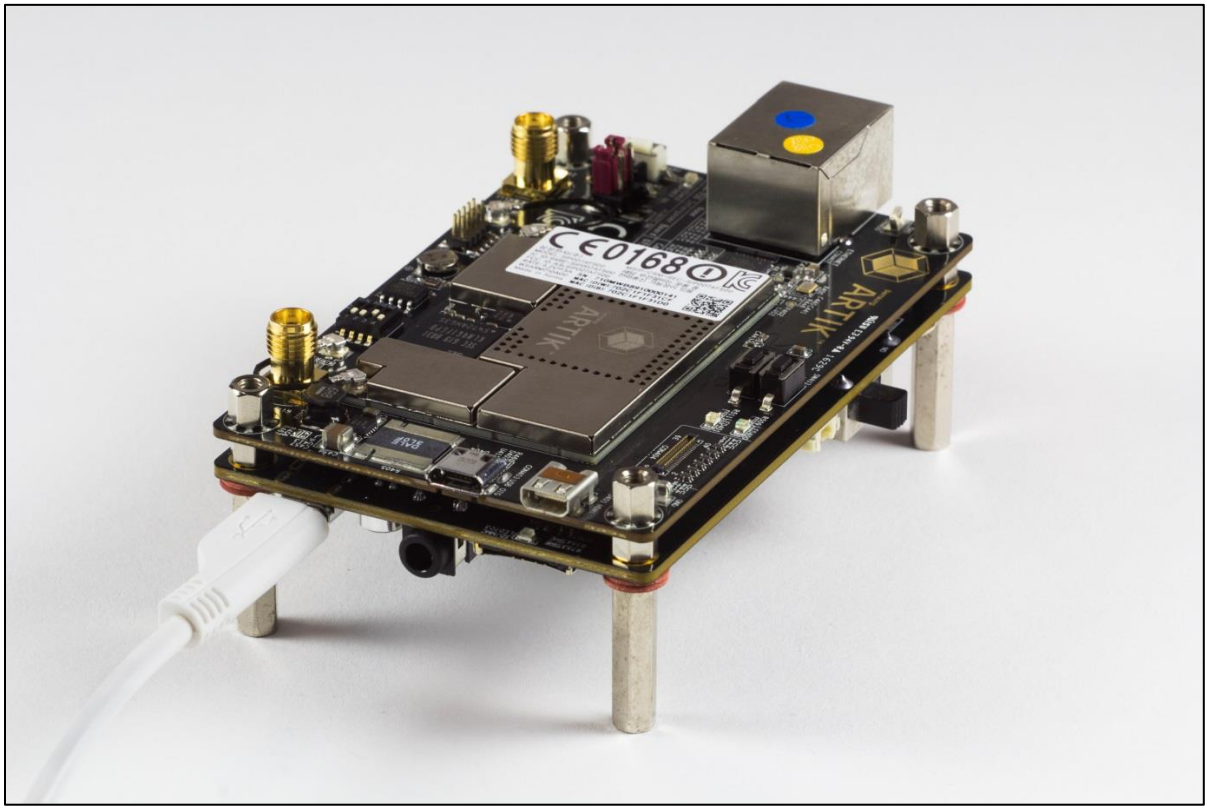

Figure 23. USB Serial Cable hooked up to the Platform Board

Terminal Emulator Installation

Setting up a connection with the ARTIK 710 Module can be done in a wired or wireless manner. Here we choose to install PuTTY a free serial console. The software can be downloaded from *http://www.putty.org/*. Once downloaded go through the following steps:

1. Open the device manager on the control panel.
2. When using a PC install the USB to Serial driver. The driver can be found at the following location : (*http://www.ftdichip.com/Drivers/CDM/CDM21218_Setup.zip*). For other drivers please visit (*http://www.ftdichip.com/Drivers/D2XX.htm*).
3. Check the COM port number on your PC when you connect the USB serial cable. In our case the COM port allocated is COM3.

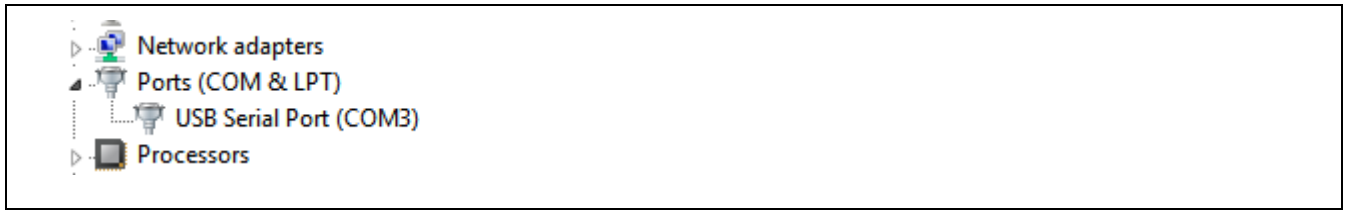

4. Set the PuTTY configuration as follows:
   a. Set the “Serial line” as the COM port number found in step 2.
   b. Set the COM speed to "115200".
   c. Set the connection type to "Serial".
   d. Save the session under ARTIK-Pro.
5. Select your saved session and click the “Open” button.

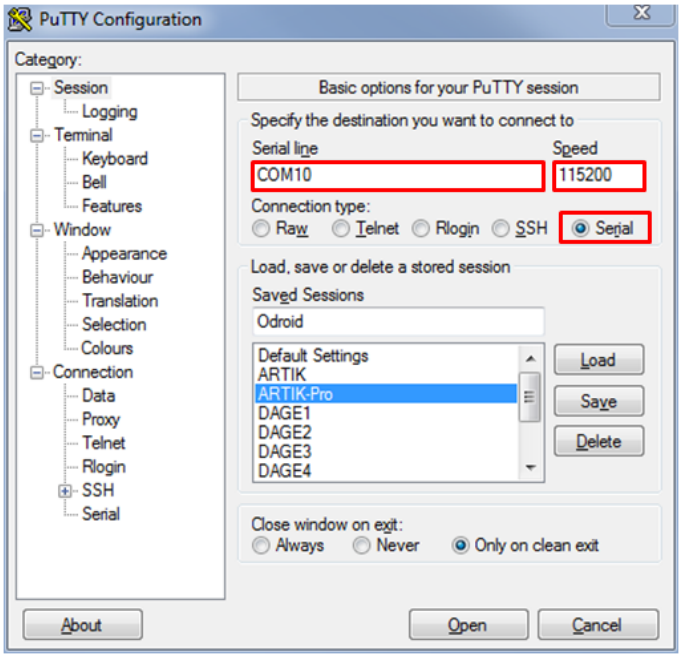

Powering up the ARTIK 710 Development Environment

To power up the ARTIK 710 Development Environment you first have to connect the power adapter and the platform board as shown in *Figure 24*.

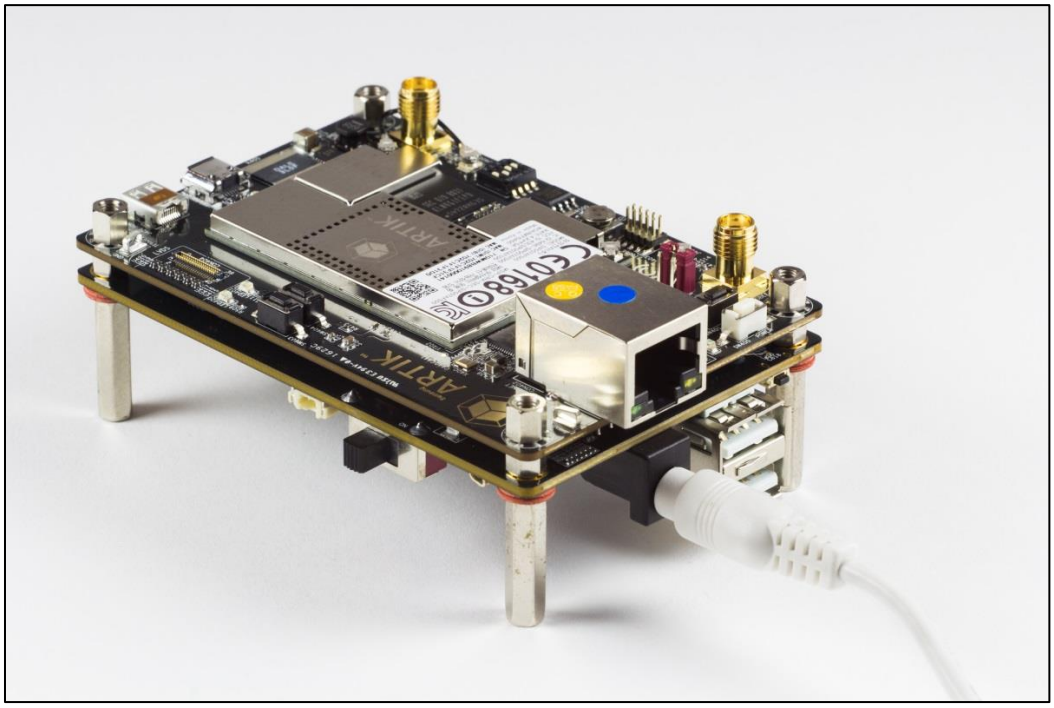

Figure 24. Connect Power Adapter

Turn on the power switch as shown in *Figure 25*.

Figure 25. Location of Power Switch

Once the power switch is turned on, push the power button (SW2), as depicted in *Figure 26*, for about 1 second. Once released the booting process will start and you should see booting messages from your console, using the serial connection that you previously established.

Figure 26. Power Button to initiate booting

LEGAL INFORMATION